Compact PCI Front Panels
IEEE 1101.10 Compliant

FEATURES

- Full Range of Feature and Performance Options
- Standard 3U and 6U Board Heights, Custom Sizes Available Upon Request
- Metal or Foam Gasket Options
- Overlay or Silkscreen
- Full Range of Handle Options
- Maximum Face Area Available for I/0 Features
- Hot Swap Switch Option

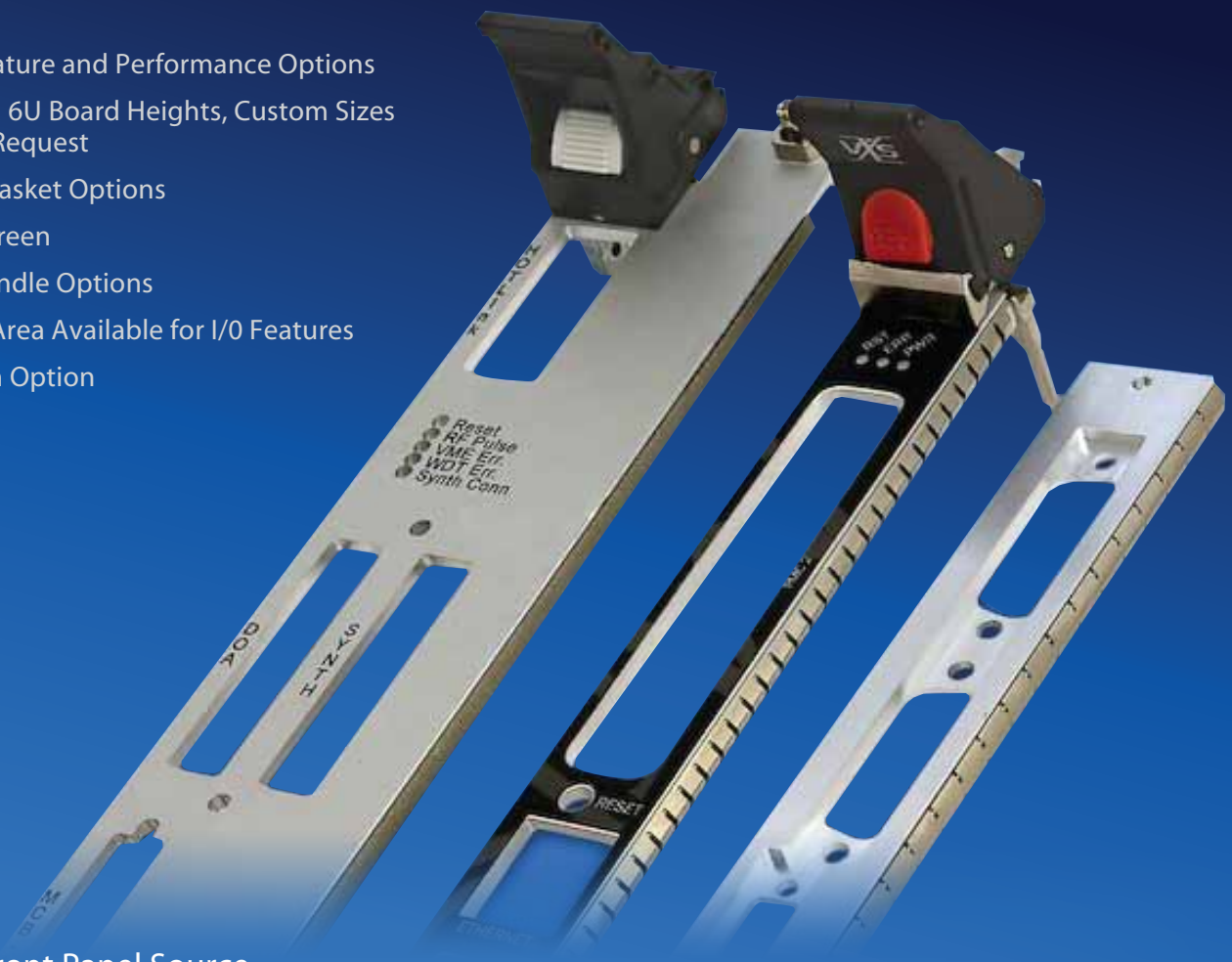

XTech — The Front Panel Source

Standard Compact PCI Front Panels are Now Supported by the XTech XPRESS Program!

XPRESS FROM START TO FINISH

- Drawings Online for Easy Access / Modification
- Online Quote Request
- Engineering Documentation and Approvals - XPRESS Style
- Production - 15 Days on New Orders; 10 Days on Reorders

XTECH XPRESS

Front Panels are Assembled and Ready to Go!

Contact our Sales Department by Phone at 1-888-444-1644 or by Email at xpresssales@xtech-outside.com For More Information

WWW.XTECH-OUTSIDE.COM | 1-888-444-1644

Compact PCI Front Panel Assemblies and Components

STANDARD ASSEMBLIES AND COMPONENTS

FRONT PANEL ASSEMBLIES
STANDARD SIZES

3 U - 4 HP
3 U - 8 HP
6 U - 4 HP
6 U - 8 HP

SPECIAL SIZES
AVAILABLE UPON REQUEST

3U ASSEMBLY

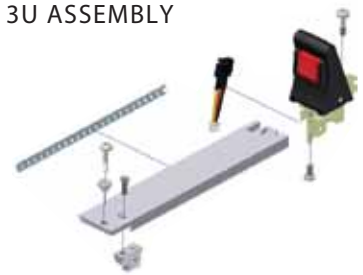

QTY 4HP	QTY 8HP	ITEM DESCRIPTION
1	1	FRONT PANEL with CLEAR CHROMATE FINISH
1	1	BOTTOM EJECTOR WITH PANEL SCREW
1	1	HOT SWAP SWITCH
1	1	EMI GASKET (METAL OR FOAM)
1	3	SCREW SLEEVE
2	4	FASTENING SCREW
1	1	PCB BOARD MOUNT WITH FASTENING SCREW

6U ASSEMBLY

QTY 4HP	QTY 8HP	ITEM DESCRIPTION
1	1	FRONT PANEL with CLEAR CHROMATE FINISH
1	1	BOTTOM EJECTOR WITH PANEL SCREW
1	1	TOP EJECTOR WITH PANEL SCREW
1	1	HOT SWAP SWITCH
1	1	EMI GASKET (METAL OR FOAM)
0	2	SCREW SLEEVE
2	4	FASTENING SCREW
0	0	OPTIONAL - PCB BOARD MOUNT

STANDARD CONFIGURATIONS

All Standard Sizes are Supported by the XTech XPRESS program!

3U and 6U Standard PCB Board Heights Available For All Panels

XTech XPRESS - Customize the Panels with your cutouts and labeling. . . Check out www.xtech-outside.com to download drawings.

Custom Panel Heights, Widths, and Finishing are Available Upon Request

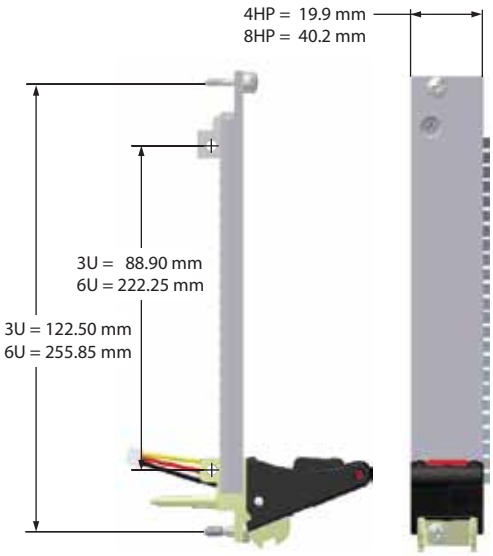

"S" VERSION EJECTOR
INCLUDES PANEL ATTACHMENT SCREW

BOTTOM EJECTOR - XTECH# 125875
TOP EJECTOR - XTECH# 125874

SUPPORTED BY XTECH XPRESS

"E" VERSION EJECTOR
INCLUDES PANEL ATTACHMENT SCREW

BOTTOM EJECTOR - XTECH# 125877
TOP EJECTOR - XTECH# 125876

SUPPORTED BY XTECH XPRESS

"L" VERSION EJECTOR
INCLUDES PANEL ATTACHMENT SCREW

PLEASE CONTACT XTECH SALES FOR ADDITIONAL OPTIONS

"Z" VERSION EJECTOR
INCLUDES PANEL ATTACHMENT SCREW

PLEASE CONTACT XTECH SALES FOR ADDITIONAL OPTIONS

HOT SWAP SWITCH
MICROSWITCH

- XTECH# 125906

PCB BOARD MOUNT
CARD HOLDER WITH ANTI-ROTATION
INCLUDES PANEL ATTACHMENT SCREW

- XTECH# 125907

SCREW SLEEVE
CLINCH FASTENER

- XTECH# 125904 Pkg. of 10
- XTECH# 125836 Pkg. of 100

COLLAR SCREW
PHS-M2.5X12mm SCREW

- XTECH# 125905 Pkg. of 10
- XTECH# 125838 Pkg. of 100

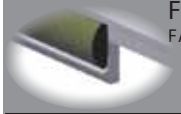

FOAM EMI GASKET
FABRIC OVER FOAM CUT TO LENGTH

3U - XTECH# 125924
6U - XTECH# 125925

METAL EMI GASKET
STAINLESS STEEL CUT TO LENGTH

3U - XTECH# 125920
6U - XTECH# 125921

Reference XTech Part Numbers to Purchase Components in Packages of 10

U	HP	GASKET	Chromated Blank Panel
3U	4HP	FOAM	125845
3U	4HP	METAL	125846
3U	8HP	FOAM	125849
3U	8HP	METAL	125850
6U	4HP	FOAM	125847
6U	4HP	METAL	125848
6U	8HP	FOAM	125851
6U	8HP	METAL	125852

sales@xtech-outside.com
358 North Street, Randolph, MA 02368
www.XTech-Outside.com
US Sales: 1-888-444-1644
China Sales: 86-592-5765365